Your Name _____ Score _____

Group Members _____ _____ Minutes _____

Standard 4
Key Idea 1

Performance Indicator 1.1

Explain complex phenomena, such as tides, variations in day length, solar insolation, apparent motion of the planets, and annual traverse of the constellations.

Major Understanding:

1.1d Earth rotates on an imaginary axis at a rate of 15 degrees per hour. To people on Earth, this turning of the planet makes it seem as though the Sun, the moon, and the stars are moving around Earth once a day. Rotation provides a basis for our system of local time; meridians of longitude are the basis for time zones.

1.1e The Foucault pendulum and the Coriolis effect provide evidence of Earth's rotation.

1.1f Earth's changing position with regard to the Sun and the moon has noticeable effects.

- Earth revolves around the Sun with its rotational axis tilted at 23.5 degrees to a line perpendicular to the plane of its orbit, with the North Pole aligned with Polaris.
- During Earth's one-year period of revolution, the tilt of its axis results in changes in the angle of incidence of the Sun's rays at a given latitude; these changes cause variation in the heating of the surface. This produces seasonal variation in weather.

1.1g Seasonal changes in the apparent positions of constellations provide evidence of Earth's revolution.

1.1h The Sun's apparent path through the sky varies with latitude and season.

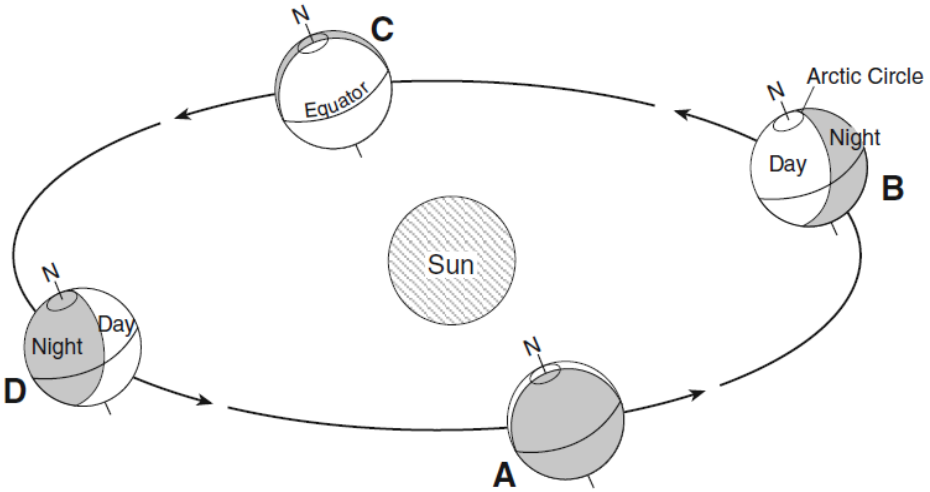

Mini Lesson 1: Rotation

Rotation is the spinning of Earth on its axis 15° per hour. It causes daylight and night and the apparent motion of the sun around the Earth. One complete rotation takes one day, approximately 23 hours, 56 min, 4 sec. Evidence of rotation includes the Coriolis Effect (the deflection of winds and ocean currents), circumpolar stars (stars around Polaris), and star trails (the apparent motion of stars in the night sky).

The Foucault Pendulum also is evidence of rotation. Named after Jean Foucault, this pendulum would swing back and forth and rotate in a complete circle at a rate of about 15° per hour. This was an indication that Earth was moving underneath it.

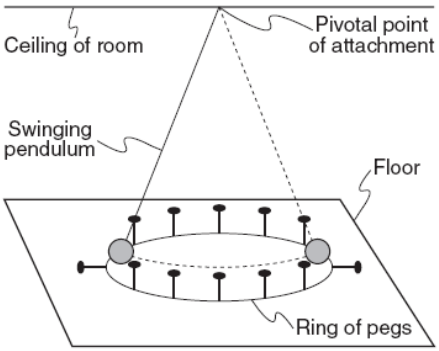

Need to know:

1. What is rotation? _____
2. At what rate does Earth rotate? _____
3. What two things does the rotation of Earth cause? _____

_____

_____

4. How long does it take for one rotation? ____day, approximately _____hours _____min_____sec
5. List four pieces of evidence of Earth's rotation, include a description of what it is.
   - _____
   - _____
   - _____
   - _____

Regents Questions:

_____1. The apparent shift in the direction of swing of a the motion of a Foucault pendulum provides evidence of

(1) the Sun's rotation
(2) the Sun's revolution
(3) Earth's rotation
(4) Earth's revolution

A camera was placed outside at night and pointed directly at Polaris and several other stars. The lens was kept open and a time-exposure photograph was taken. The diagram below represents that photograph of Polaris and star trails, with an angular protractor to measure apparent motion.

(Use any star trail for the degrees the stars moved.)

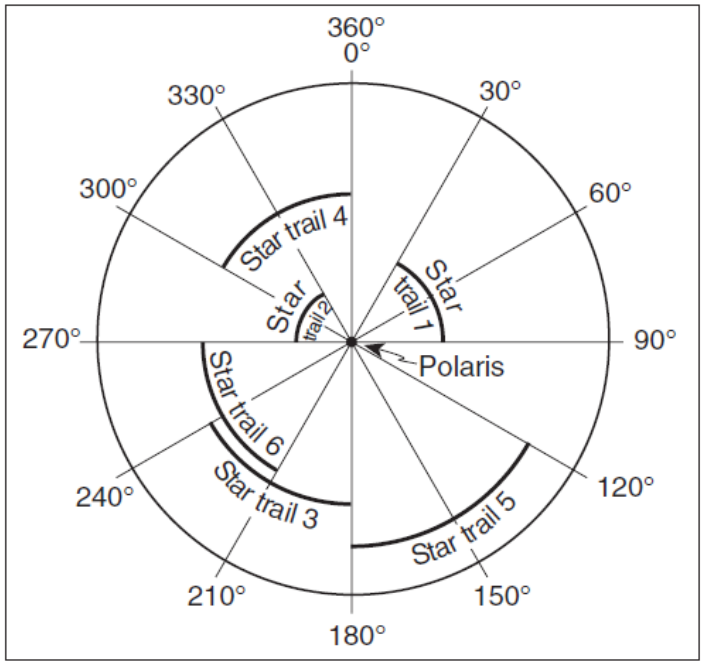

____2. How many degrees per hour does Earth rotate?
(1) 15° (3) 45°
(2) 30° (4) 60°

____3. How many hours was the lens kept open to create the star trails in this photograph?
(1) 1 hour (3) 6 hours
(2) 3 hours (4) 4 hours

____4. The Coriolis effect provides evidence that Earth
(1) rotates (2) has a tilted axis (3) has seasons (4) revolves

____5. The best evidence that Earth rotates is provided by the
(1) location of mid-oceanic ridge volcanoes and the distribution of index fossils
(2) movement of Foucault pendulums and the Coriolis effect on air movement
(3) pattern of changing seasons and the depth of meteor impacts
(4) rate of uranium-238 decay and changes in atmospheric composition

____6. A Foucault pendulum appears to change its direction of swing due to the
(1) tilt of Earth's axis
(2) spin of Earth on its axis
(3) deflection of Earth's planetary winds
(4) movement of Earth in its orbit around the Sun

____7. Predictable changes in the direction of swing of a Foucault pendulum provide evidence that
(1) Earth is tilted on its axis (3) Earth rotates on its axis
(2) Earth's orbit is slightly elliptical (4) Earth's magnetic poles reverse over time

____8. The apparent change in direction of a swinging Foucault pendulum is the result of the
(1) rotation of Earth (3) revolution of Earth
(2) tilt of Earth's axis (4) shape of Earth's orbit

____9. The change in direction of the Foucault pendulum is caused by Earth's
(1) revolution (2) spherical shape (3) rotation (4) tilted axis

The diagram below shows star trails as seen by an observer looking in different directions. The stars in the diagram are located on the celestial sphere. This is an imaginary dome around the horizon that helps illustrate the position of celestial objects (objects in the sky).

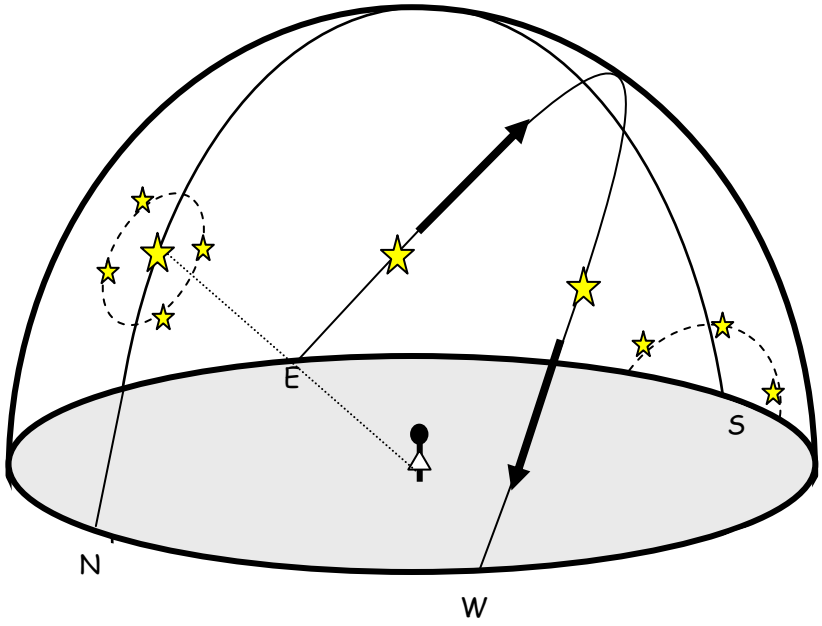

Match the star trails with the diagram above to determine the direction the observer was looking. Place the compass direction on the arrows next to each star trail diagram.

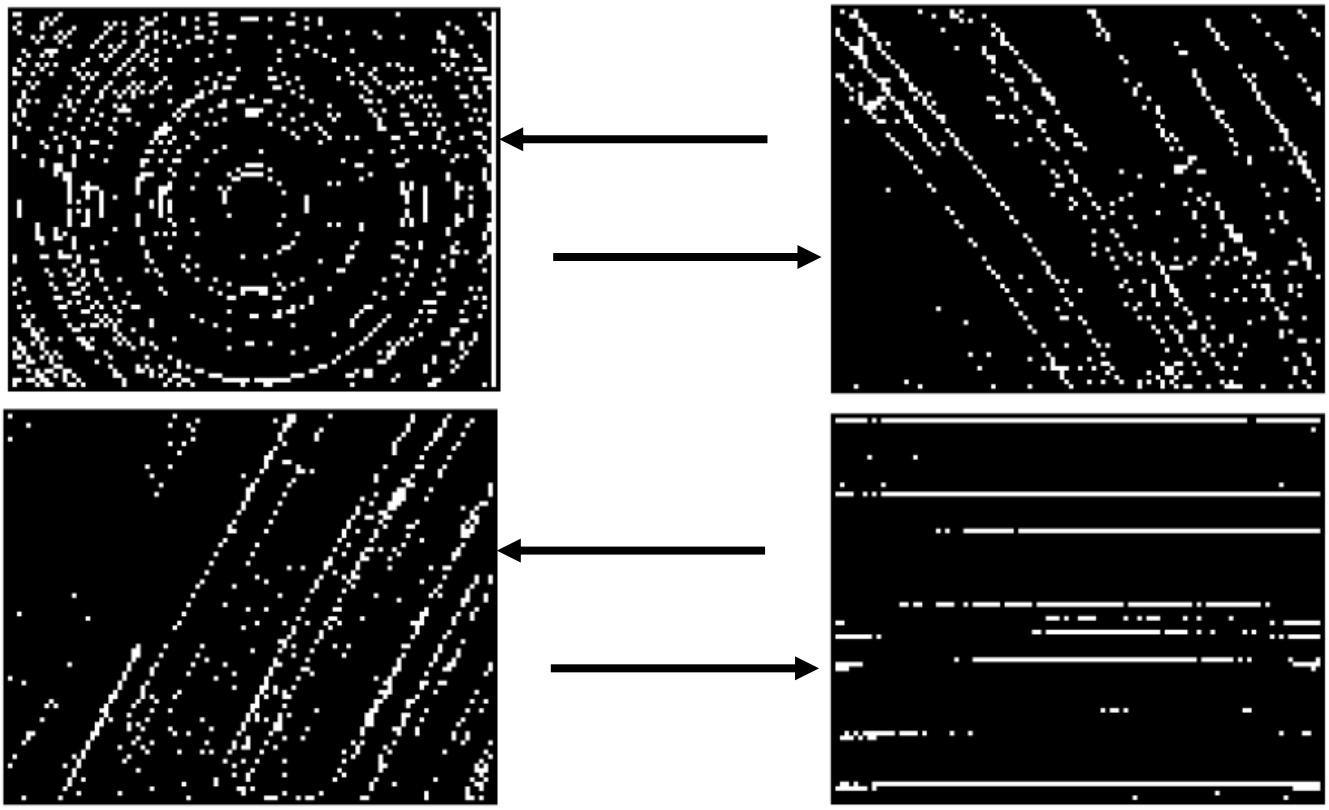

Mini Lesson 2: Revolution

Revolution is the movement of a celestial object in an orbit around another celestial object. Earth moving in its orbit around the Sun is just one example of revolving. The completed orbit of Earth around the Sun takes 1 year, roughly 365.26 days. It moves at a rate of approximately 1° per day. It is one of the contributing factors for seasons on Earth, along with Earth's tilt of 23 $\frac{1}{2}$° and parallelism of its axis. Evidence of Earth's revolution is provided by the changing locations of constellations from month to month in relationship to Polaris changes.

Need to know:

1. What is revolution? _____

_____

2. How long does it take the Earth to revolve around the Sun? _____ year, roughly _____ days
3. At what rate does Earth revolve around the Sun? _____
4. What degree is the tilt of Earth's axis? _____
4. List the three factors that contribute to the seasons on Earth.

_____

_____

_____

5. What evidence supports Earth's revolution? _____

_____

Picture this: **<u>Locations on Earth</u>:** Note: the part of Earth that is lit by the Sun (left side of diagram) is called the Circle of Illumination.

Label the diagram below using the following locations.

North Pole (90°N)
South Pole (90°S)
Equator (0°)
Tropic Cancer (23 $\frac{1}{2}$ °N)
Tropic of Capricorn (23 $\frac{1}{2}$ °S)
Antarctic Circle (66 $\frac{1}{2}$ °S)
Arctic Circle (66 $\frac{1}{2}$ °N)
Axis of rotation

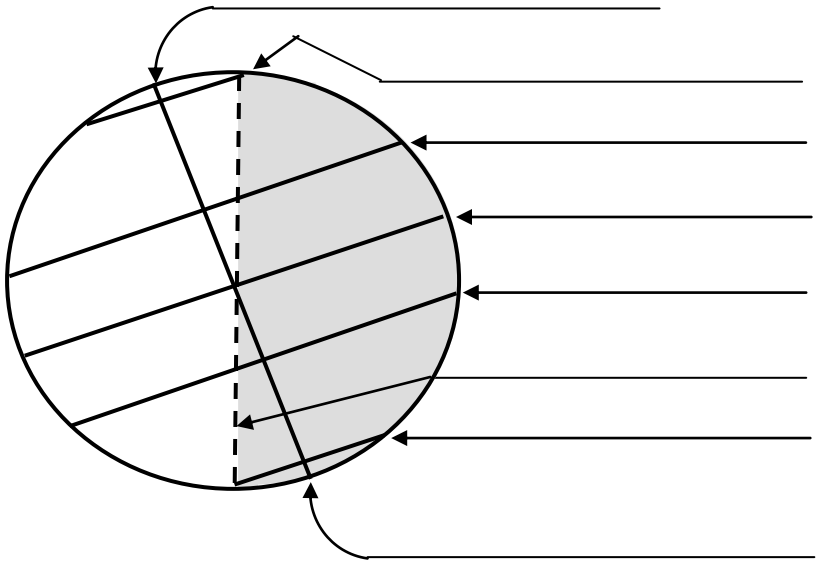

Locating objects in the sky:

The diagram below represents a model of the sky (celestial sphere) for an observer. Use the description next to each term below to label the diagram.

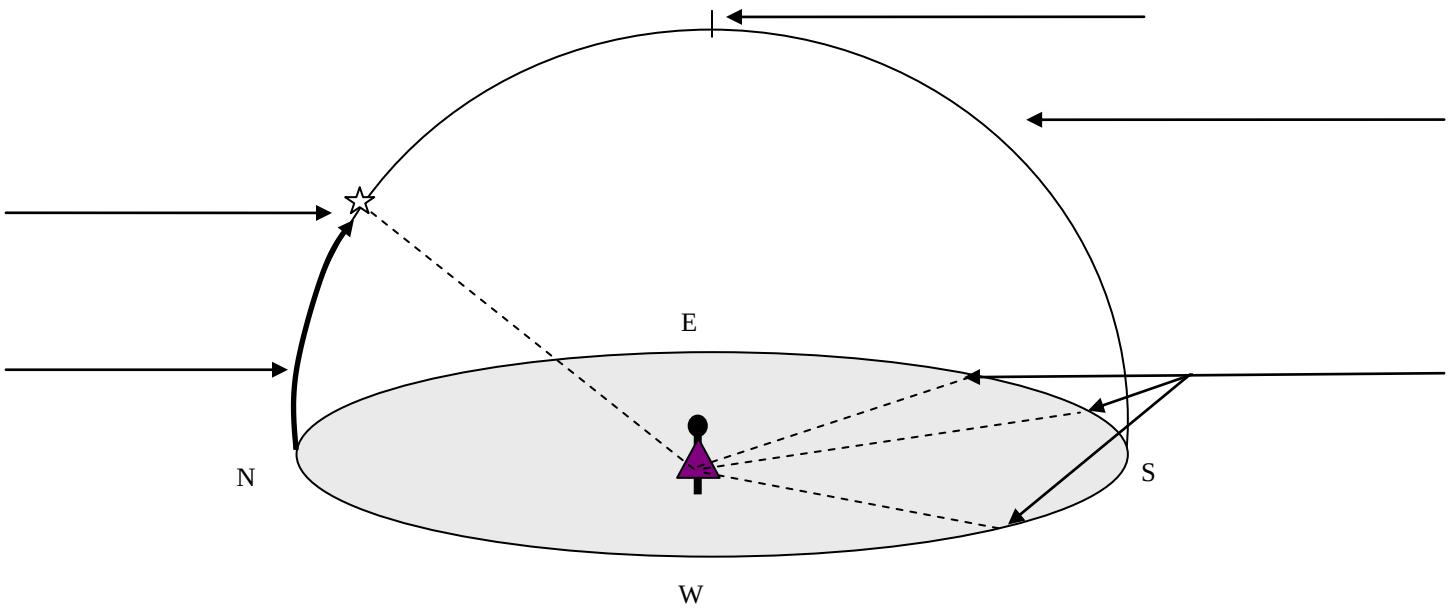

<u>Celestial sphere</u>
- imaginary dome surrounding Earth

<u>Altitude</u>
- the height above Earth's surface
- Celestial objects are measured in degrees
- Highlight the arrow that goes from the horizon to the star.
- Label the arrow pointing to the yellow highlighted arrow altitude.

<u>Polaris</u>
- equals an observers North latitude (label the star Polaris)

<u>Zenith</u>
- the point located directly overhead of an observer
- altitude is 90°

<u>Azimuth</u>
- the angular measurement around Earth's surface
- measured in degrees starting with due North located at 0° Azimuth and moving clockwise around the horizon.
- Label the line that is pointing to the three dotted lines to show azimuth

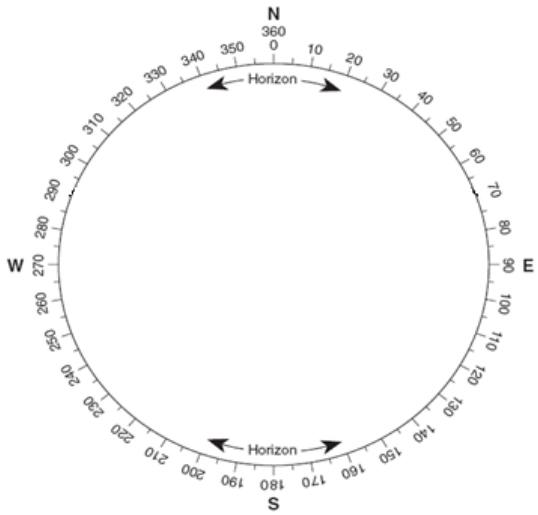

Mini Lesson 3: Important Circles

The direct ray of the sun, also known as the Sun's vertical ray, occurs when the Sun is directly overhead at a location on Earth (at its Zenith). Due to Earth's tilt of the axis at 23 $\frac{1}{2}$° the direct ray of the Sun changes as Earth revolves around the Sun. It is the movement of the direct ray that causes the change in seasons.

The Tropic of Cancer (23 $\frac{1}{2}$ °N) and Tropic of Capricorn (23 $\frac{1}{2}$ °S) are the farthest locations north or south of the equator where the Sun is ever directly overhead. The area between the two tropics is sometimes referred to as "within the tropics". This means the Sun is NEVER directly overhead in the Continental United Sates and therefore NEVER directly overhead in New York State.

The Arctic circle (66 $\frac{1}{2}$ °N) and Antarctic Circle (66 $\frac{1}{2}$°S) are the first locations north or south of the equator that have at least one 24 hour period of daylight, while the other experiences a 24 hour period of darkness.

Need to know:

1. Where in the sky is the sun when the vertical ray at that location ? _____
2. What two factors cause the direct ray of the Sun to change its location on Earth? _____

   _____

   _____

3. Why is the Tropic of Cancer located at 23 $\frac{1}{2}$ °N? _____

   _____

   _____

5. What is the tilt of Earth's axis? _____
6. What is the latitude of the North Pole? _____
7. Subtract the tilt of Earth's axis from the latitude of the North Pole. _____
   - What is located at the degree latitude you just determined? _____
8. Think: What season begins in New York State when the Sun's vertical rays are at the Tropic of Cancer (23 $\frac{1}{2}$°N)? _____
9. Think: What is true about the amount of daylight on the first day of summer in New York State?
   Circle the answer: (longest amount of daylight / shortest amount of daylight / 12 hours of daylight)
10. Think: If the equator has 12 hours of daylight everyday (even in the summer) , what happens to the length of daylight hours as your latitude North increases? _____

Introduction:

Earth axis of rotation in reference to the Sun is 23 $\frac{1}{2}$°. The locations of the Tropic of Cancer, Tropic of Capricorn, Arctic Circle and Antarctic Circle can all be attributed to this tilt. If Earth had no tilt, we would not have seasons. It is the movement of the Sun's vertical ray (23 $\frac{1}{2}$ °) each season that causes the northern hemisphere in the summer to heat up and its cooling in the winter. The Sun's apparent path therefore changes with seasons and latitude.

Objective:

- To determine how the tilt of Earth's axis helps cause seasons

Procedure A:

1. On each of the three diagrams (A, B, and C) of Earth, label the ***North Pole, South Pole, Equator, Tropic of Cancer and Tropic of Capricorn*** on the lines in the Earth's illustration NOT on the dotted lines for the Sun's rays.
2. Draw in and label the **Arctic Circle** and **Antarctic Circle** (refer to diagram on page 5).
3. Answer the questions that follow each diagram.

Diagram A

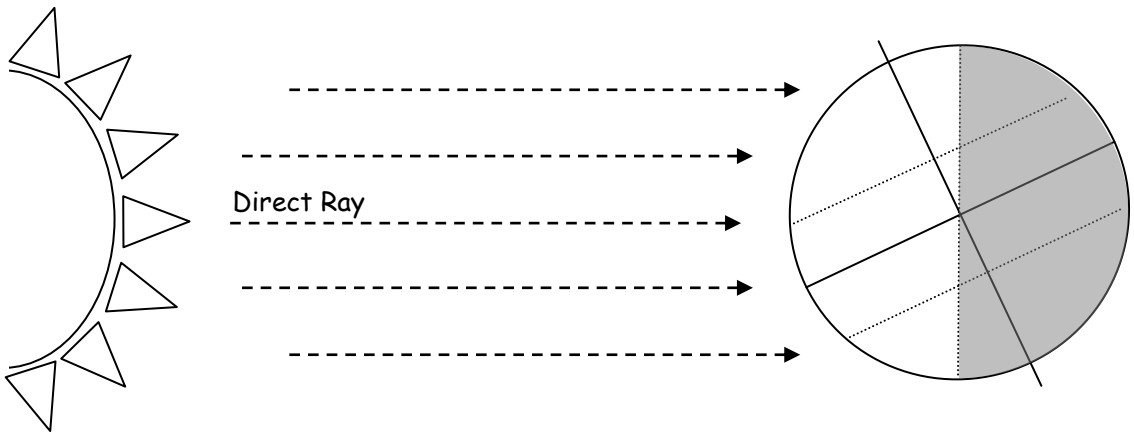

1. At what location is the direct ray of the Sun? _____
2. Referring to the illuminated portion of Earth, are the daylight hours greater than the night north or south of the equator? _____
3. What season would it be when the daylight hours are greater than the night? _____
4. What season would it be when the night time hours are greater than daylight? _____
5. What season is it in New York State when the direct rays of the Sun are located as shown in the diagram above? _____

Diagram B

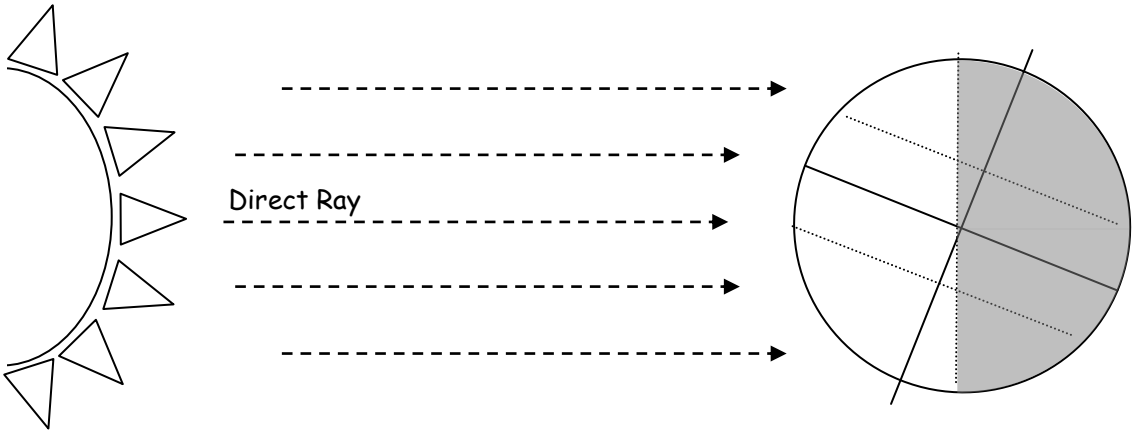

1. At what location is the direct ray of the Sun? _____
2. Referring to the illuminated portion of Earth, are the daylight hours greater than the night north or south of the equator? _____
3. What season would it be when the daylight hours are greater than the night? _____
4. What season would it be when the night time hours are greater than daylight? _____
5. What season is it in New York State when the direct rays of the Sun are located as shown in the diagram above? _____

Diagram C

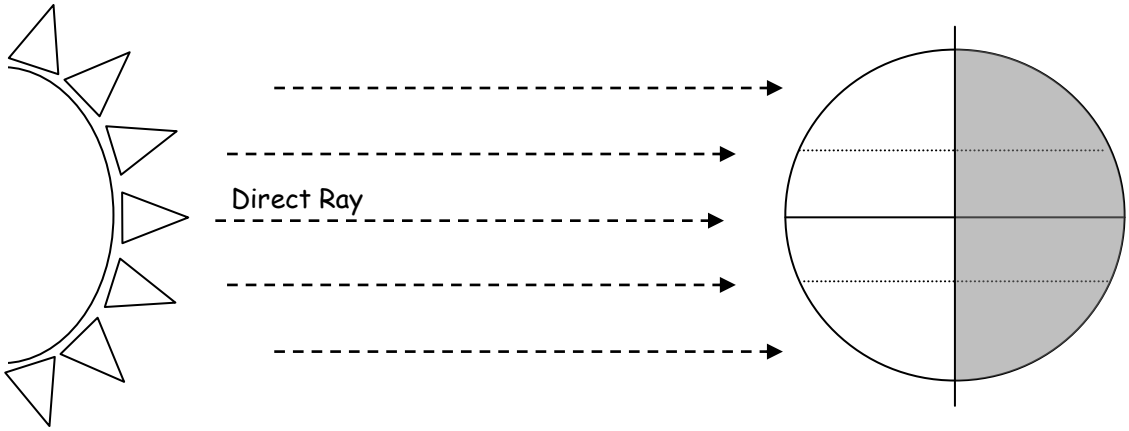

1. At what location is the direct ray of the Sun? _____
2. Referring to the illuminated portion of Earth, what is true about the daylight and night time hours? _____
3. What two seasons would it be when the daylight hours are equal to the night? _____

   _____

5. What two season is it in New York State when the direct rays of the Sun are located as shown in the diagram above? _____ and _____

Procedure B:

1. The diagram on page 11 illustrates Earth 's position on the first day of each season.

2. Place the underlined facts on the lines provided that corresponds with the season.

   - Place an "N" on each diagram of Earth to show where the North Pole is.

   - Determine which diagram represents summer in the northern hemisphere and label it "Summer solstice" on the line provided. (North Pole tilted toward the Sun).

     - This occurs on June 21, the first day of summer for the Northern Hemisphere.
     - The direct ray of the Sun is at the Tropic of Cancer (23 $\frac{1}{2}$°N).
     - This is the longest "day" (hours of daylight) north of the equator and any location on or past the Arctic Circle has 24 hours of daylight.
     - Approximately 15 hours of daylight in New York State

   - Determine which diagram represents winter in the northern hemisphere and label it "Winter solstice" on the line provided (South Pole tilted toward the Sun).
     - This occurs on December 21, the first day of winter for the Northern Hemisphere.
     - The direct ray of the Sun is at the Tropic of Capricorn (23 $\frac{1}{2}$°S).
     - This is the shortest "day" (hours of daylight) north of the equator and any location on or past the Arctic Circle has 24 hours of night.
     - Approximately 9 hours of daylight in New York State

   - With a color pencil draw four arrows (counter clockwise) on the orbital path to show Earth's movement around the sun throughout the year.

   - Follow the motions of Earth counterclockwise to determine which is Spring and which is Autumn. Label the "Spring equinox" and "Autumnal equinox" where the direct rays are at the equator.

     - The Spring Equinox occurs on March 21, the first day of spring for the Northern Hemisphere.
     - The Autumnal Equinox occurs on September 23, the first day of fall for the Northern Hemisphere.
     - For each equinox, the direct ray of the Sun is at the Equator (0° latitude),
     - There is 12 hours of daylight at every location on Earth (except at the poles).

3. Fill in the table underneath the diagram.

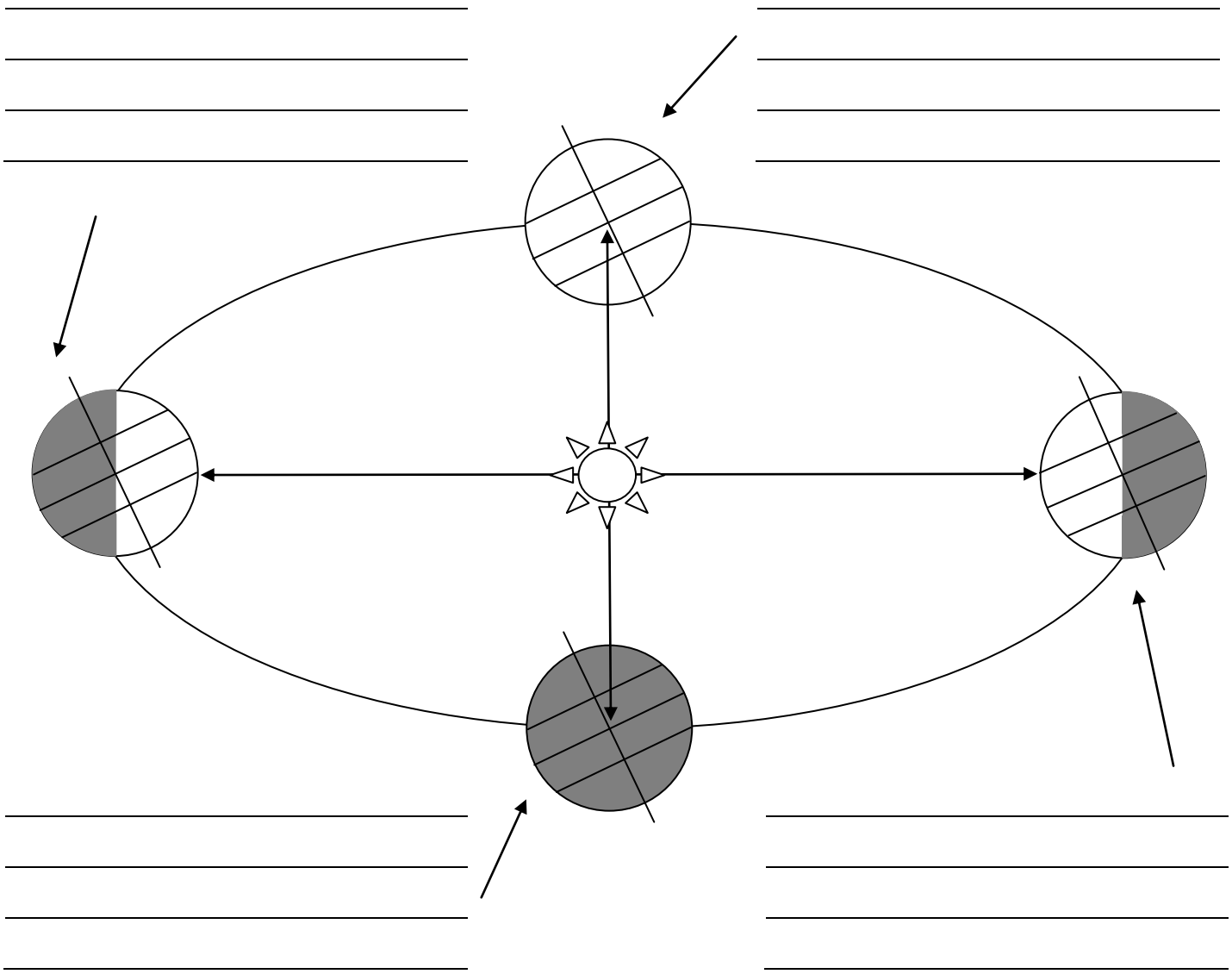

Summary of Seasons:

Date	Name of the Day in the Northern Hemisphere	Where are the Sun's Direct Rays	Hours of Daylight at each of the following locations:		
			Equator	New York State	Arctic Circle
June 21					
September 23					
December 21					
March 21					

Materials
- ✓ internet access

Introduction:

Reasons for seasons: The major cause for the different seasons is Earth's 23 $\frac{1}{2}$°tilt of its axis. This tilt of Earth's axis is the cause for the change in the length of daylight at different latitudes. As Earth revolves around the Sun, the North Pole always points in the same direction. Sometimes the northern hemisphere receives more daylight and sometimes the southern hemisphere receives more daylight. If a location receives longer daylight hours than night time hours, it is summer.

Objective:

- To draw the seasonal paths of the Sun for several locations on Earth

Procedure I:

1) Using the internet, go to the following web site: Search "Sun's Path"
   Choose the link with "anu" in the web address – usually the first choice.

2) Read the information about the Sun's path and answer the questions below
   a) How many times bigger is the Sun compared to the Earth? _____
   b) Why does the Sun appear small in the sky? _____
   c) How long does it take the Earth to revolve around the Sun? _____
   d) How long does it take the Earth to complete on spin on its axis? _____

<u>Procedure II: USE THE SIMULAOR FOR THE FOLLOWING</u>

In this part of the lab, you are going to be manipulating the simulator and gathering a lot of information. Be sure to follow each of the instructions exactly as you go.

1) Find all of the following variables on the applet located to the right of the drawing of the Sun's path.

   - <u>Azimuth</u> – where the Sun is located with respect to due North (0° Azimuth) *The simulator uses due South as 0°azimuth. We will not be using this data as to avoid confusion.

   - <u>Altitude</u> –altitude of the sun at that given date and time

- Simulation type - keep this set at year
- Month – this you will change as you go
- Day – keep this set on 21
- Hour – this you will change as you go
- Latitude – this you will change as you go

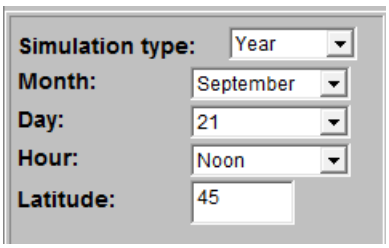

2) Use the following settings for a location that is 45°N:

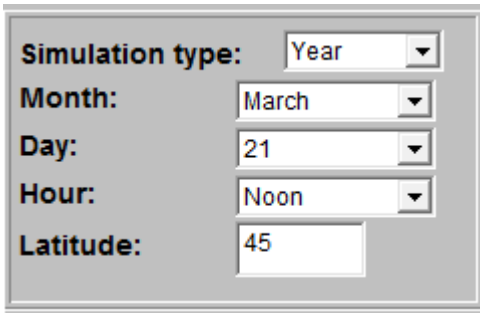

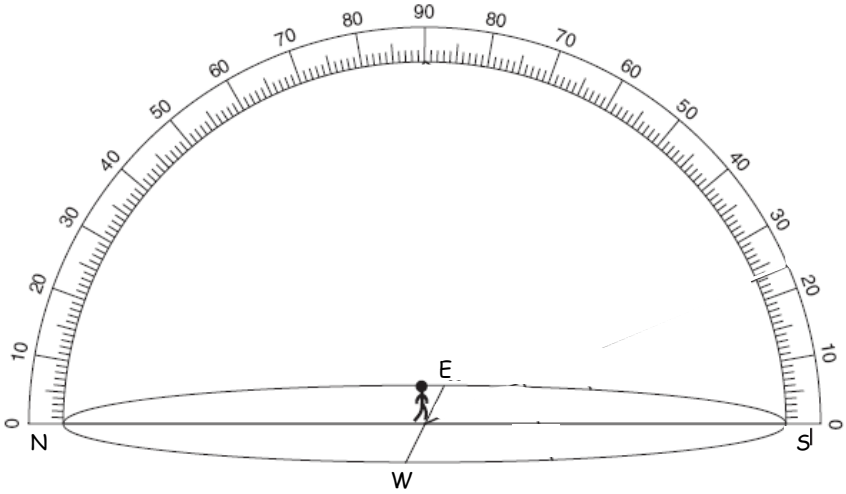

- Label Zenith on the diagram to the right.

- On the simulator, read the altitude for the noon Sun in March and record it in the data table below in the Sept/March.
- Mark the altitude of the noon Sun on the diagram above.
- Mark where the path of the Sun meets the horizon.
- Using the simulator as a guide, draw and label the path of the sun for March.
- Complete the column for March by answering the questions.
- Change the month to <u>June</u> and then to <u>December</u> and follow the directions above.

Questions: 45 ° N	March / September	June	December
What is the altitude of the noon sun?			
What is the exact compass direction of sunrise?			
What is the exact compass direction of sunset?			
What is the compass direction of the noon time shadow?			

Refer to the diagram above to answer the following questions.

(a) What month is the noon Sun highest in the sky? _____

(b) Which month has the longest path for the sun? _____

(c) What date has the longest duration of insolation at this location? _____

(d) What month is the noon Sun lowest in the sky? _____

(e) What month has the longest shadow? _____

(f) What is the name given to the date with the longest duration of insolation? _____

(g) What is the name given to the date with the shortest duration of insolation? _____

3) Use the following settings for a location that is 45°S:

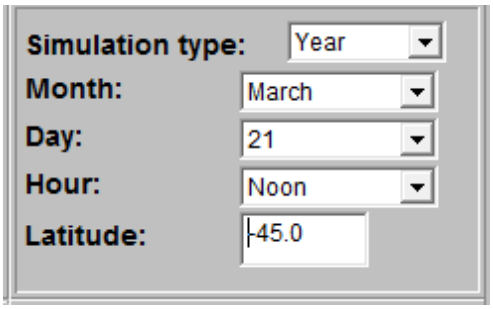

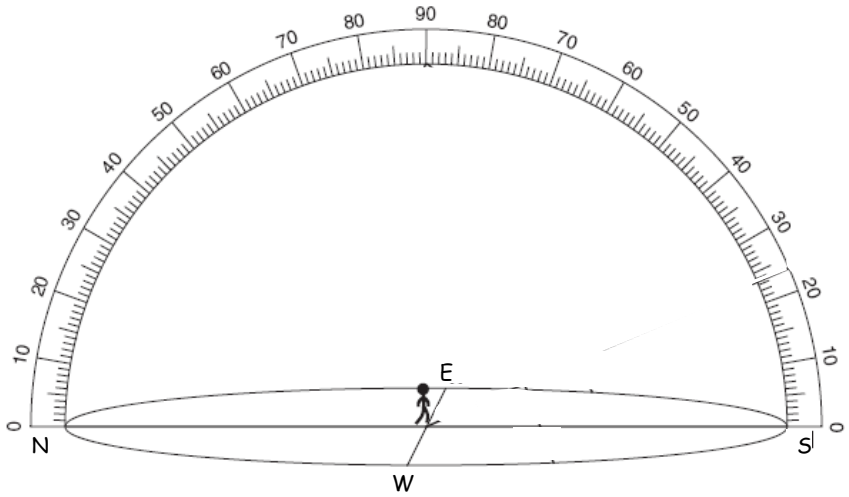

- Label Zenith on the diagram to the right.
- On the simulator, read the altitude for the noon Sun in March and record it in the data table below in the Sept/March.
- Mark the altitude of the noon Sun on the diagram above.
- Mark where the path of the Sun meets the horizon.
- Using the simulator as a guide, draw and label the path of the sun for March.
- Complete the column for March by answering the questions.
- Change the month to <u>June</u> and then to <u>December</u> and follow the directions above.

Questions: 45 ° S	March / September	June	December
What is the altitude of the noon sun?			
What is the exact compass direction of sunrise?			
What is the exact compass direction of sunset?			
What is the compass direction of the noon time shadow?			

Refer to the diagram above to answer the following questions.

(a) What month is the noon Sun highest in the sky? _____

(b) Which month has the longest path for the sun? _____

(c) What date has the longest duration of insolation at this location? _____

(d) What month is the noon Sun lowest in the sky? _____

(e) What month has the longest shadow? _____

(f) What is the name given to the date with the longest duration of insolation? _____

(g) What is the name given to the date with the shortest duration of insolation? _____

4) Use the following settings for a location that is 0°:

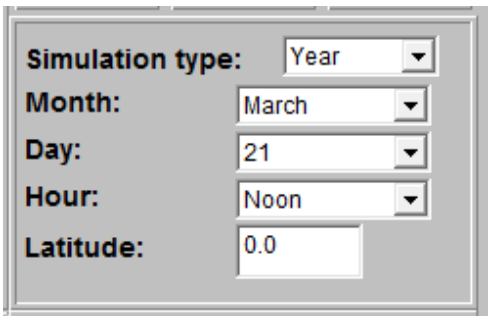

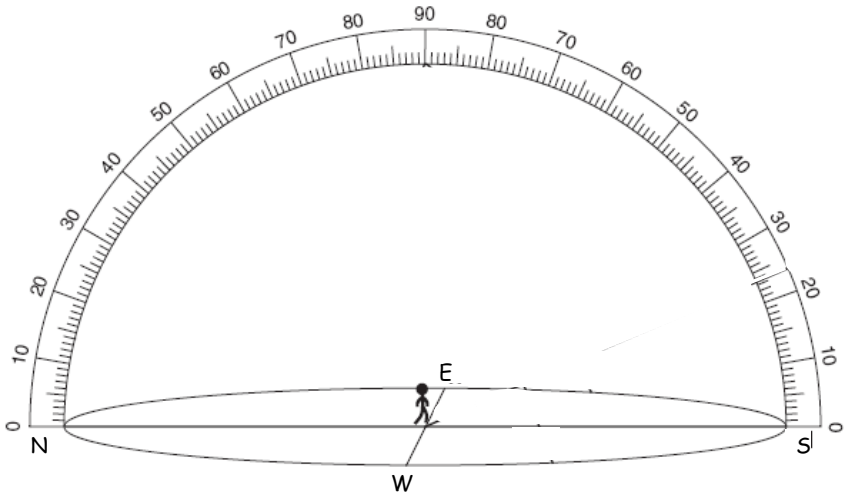

- Label Zenith on the diagram to the right.
- On the simulator, read the altitude for the noon Sun in March and record it in the data table below in the Sept/March.
- Mark the altitude of the noon Sun on the diagram above.
- Mark where the path of the Sun meets the horizon.
- Using the simulator as a guide, draw and label the path of the sun for March.
- Complete the column for March by answering the questions.
- Change the month to <u>June</u> and then to <u>December</u> and follow the directions above.

Questions: 0 ° Latitude	March / September	June	December
What is the altitude of the noon sun?			
What is the exact compass direction of sunrise?			
What is the exact compass direction of sunset?			
What is the compass direction of the noon time shadow?			

Refer to the diagram above to answer the following questions.

(a) Which months is the noon Sun highest in the sky? _____

(b) Which months have the longest shadow? _____

(c) Which month has the longest path for the sun? _____

(d) What date has the longest duration of insolation at this location? _____

(e) Which months is the noon Sun lowest in the sky? _____

(f) What is the name given to the path for March? _____

(g) What is the name given to the path for September? _____

5) Use the following settings for a location that is 90°N:

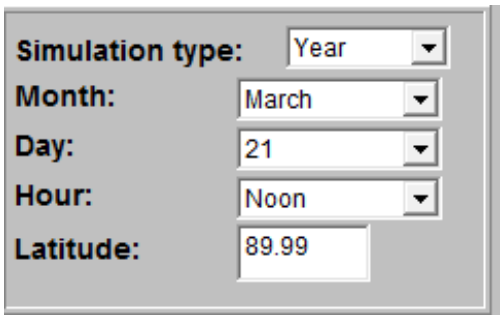

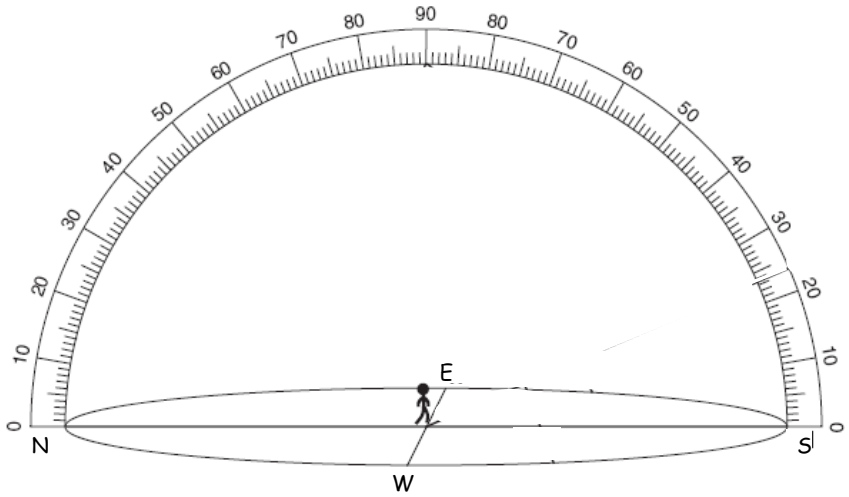

- Label Zenith on the diagram to the right.
- On the simulator, read the altitude for the noon Sun in March and record it in the data table below in the Sept/March.
- Mark the altitude of the noon Sun on the diagram above.
- Mark where the path of the Sun meets the horizon.
- Using the simulator as a guide, draw and label the path of the sun for March.
- Complete the column for March by answering the questions.
- Change the month to <u>June</u> and then to <u>December</u> and follow the directions above.

Questions: 90 ° N	March / September	June	December
What is the altitude of the noon sun?			
What is the exact compass direction of sunrise?			
What is the exact compass direction of sunset?			
What is the compass direction of the noon time shadow?			

Refer to the diagram above to answer the following questions.

(a) Describe the path of the Sun on June 21? _____

(b) Does the Sun every really "rise and set" the same way other locations on Earth do? _____

Explain your answer. _____

_____

(c) How many months of darkness does the North Pole experience in one year? _____

(d) What is the duration of insolation (in hours) for June 21? _____

(e) Why isn't it the warmest place on Earth at the North Pole in June? (hint: angle of insolation)

_____

_____

Procedure III.

Go back to the simulator *PRESS the altitude button so it shows on screen

- Label Zenith on each diagram below.
- STARTING with March - DRAW and label the path of the sun on the diagram below for March 21, June 21 and December 21 for each location.

Tropic of Cancer 23 ½°N

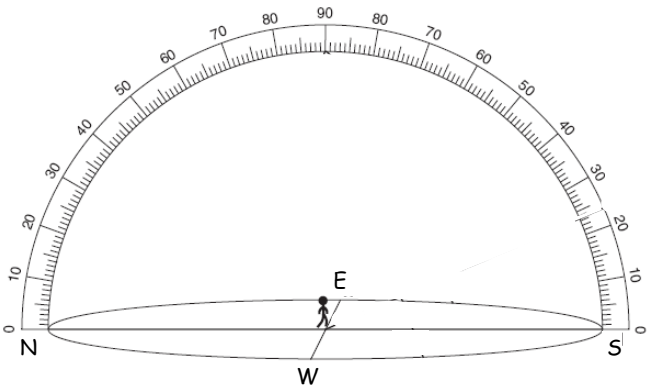

Tropic of Capricorn 23 ½°S (-23.5)

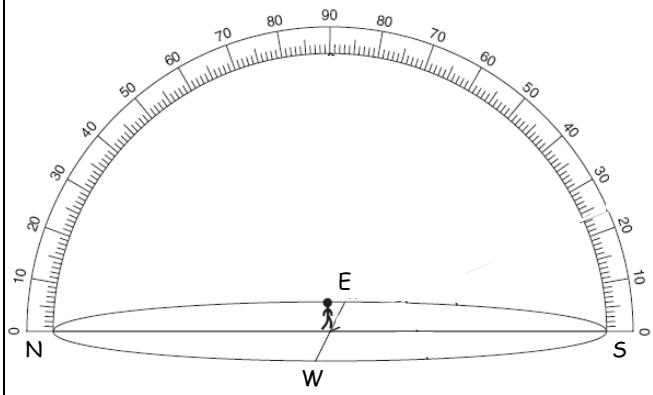

Arctic Circle 66 ½°N

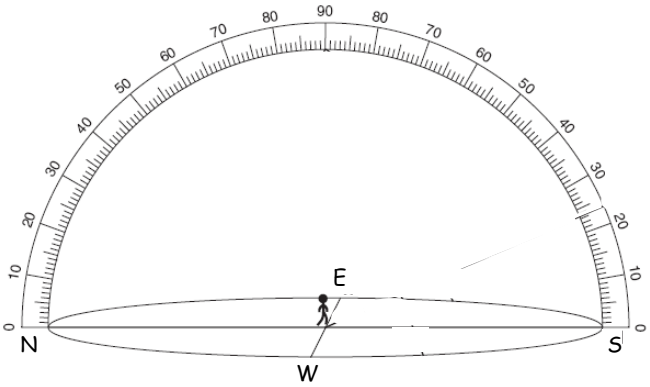

Antarctic Circle 66 ½°S (-66.5)

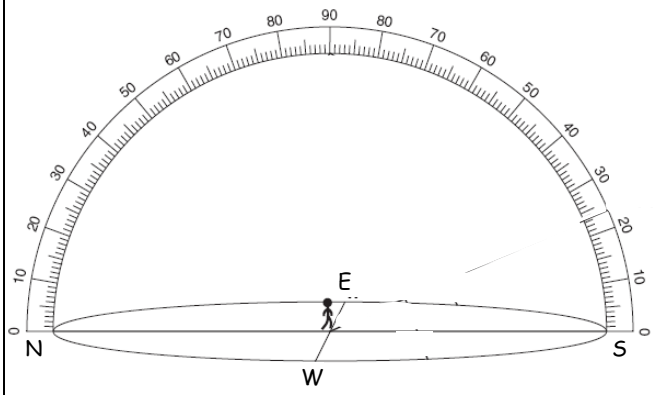

1) Which location has the noon sun in June located at zenith? _____
2) Which location has the noon sun in December located at zenith? _____
3) Which location has 24 hours of daylight in June? _____
4) Which location has 24 hours of daylight in December? _____
5) Which location has 24 hours of darkness in June? _____
6) Which location has 24 hours of darkness in December? _____

Procedure IV:

1) Set the simulator to 45 and the month to January.
2) Record the sunrise and sunset values on the data chart on the last page of this lab.
3) Go through and change the month to February and record the values on the data chart.
4) Continue through the entire year for this location
5) Determine the length of day.
6) Create a line graph using months on the bottom and length of day on the
7) Using a colored pencil, plot and graph the length of day.
8) Set the simulator to –45, 0, and 90 and repeat steps 1 – 7.
9) Use a key to show which lines correspond to each of the four locations.

45 °N

Month	Jan	Feb	Mar	Apr	May	Jun	Jul	Aug	Sep	Oct	Nov	Dec
Sunrise												
Sunset												
Length of Day												

45 °S

Month	Jan	Feb	Mar	Apr	May	Jun	Jul	Aug	Sep	Oct	Nov	Dec
Sunrise												
Sunset												
Length of Day												

0 °

Month	Jan	Feb	Mar	Apr	May	Jun	Jul	Aug	Sep	Oct	Nov	Dec
Sunrise												
Sunset												
Length of Day												

90 °N

Month	Jan	Feb	Mar	Apr	May	Jun	Jul	Aug	Sep	Oct	Nov	Dec
Sunrise												
Sunset												
Length of Day												

Length of Day

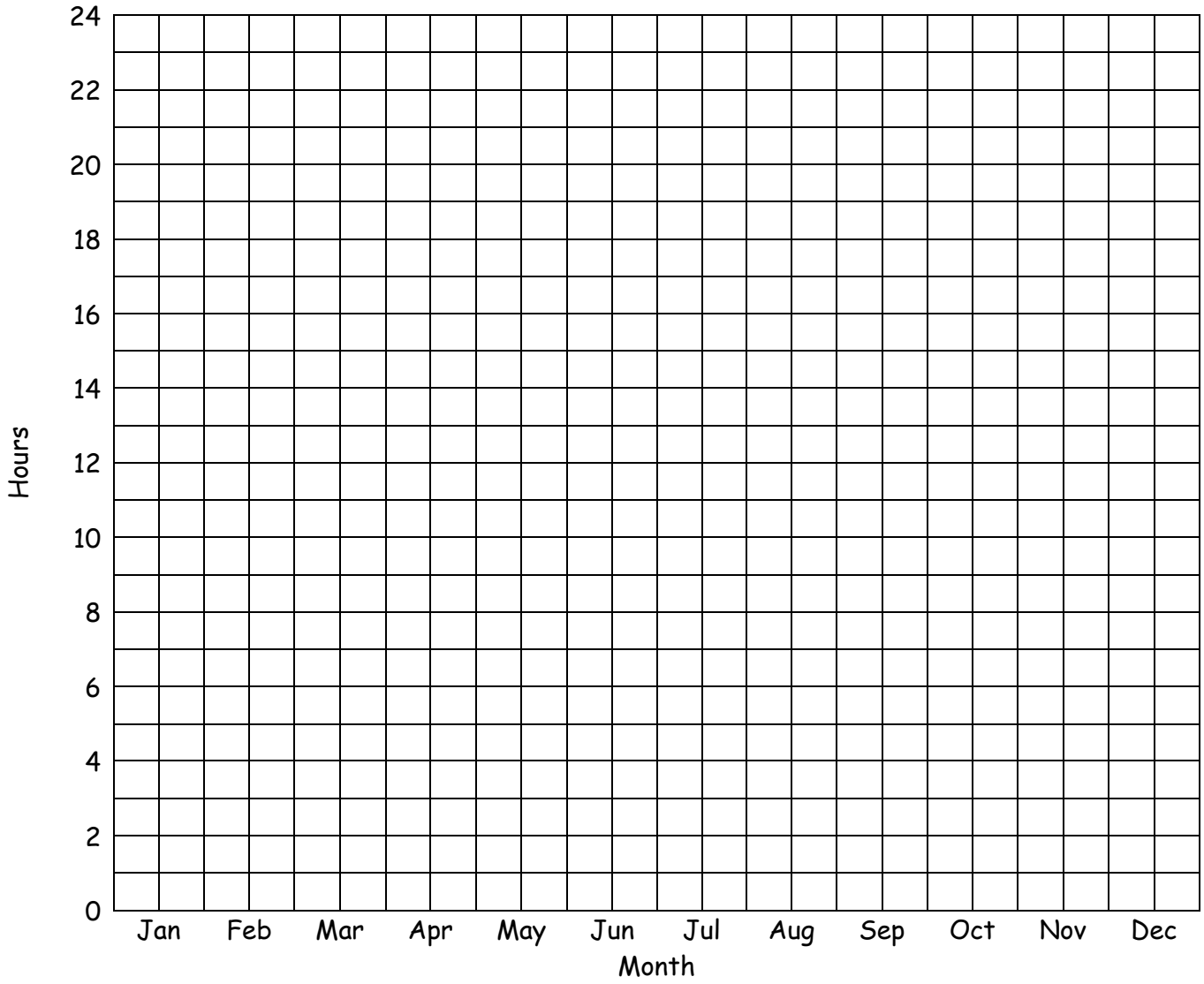

✓ **Check point**

1) Compare the line graph for 45°N with the line graph for 45°S. _____

_____

_____

2) What two days do all of the lines intersect? _____

3) What is the duration of insulation (in hours) for the date that all of the days intersect? _____

4) What names are given for the two days that all the lines intersect? _____

_____

The Sun's direct rays change from season to season. It is directly overhead at the Tropic of Cancer (23 $\frac{1}{2}$°N) on the first day of summer, at the Equator (0°) on the first day of Autumn (fall), it moves down to the Tropic of Capricorn (23 $\frac{1}{2}$°S) on the winter solstice, and finally moves back up to the equator on the first day of Spring.

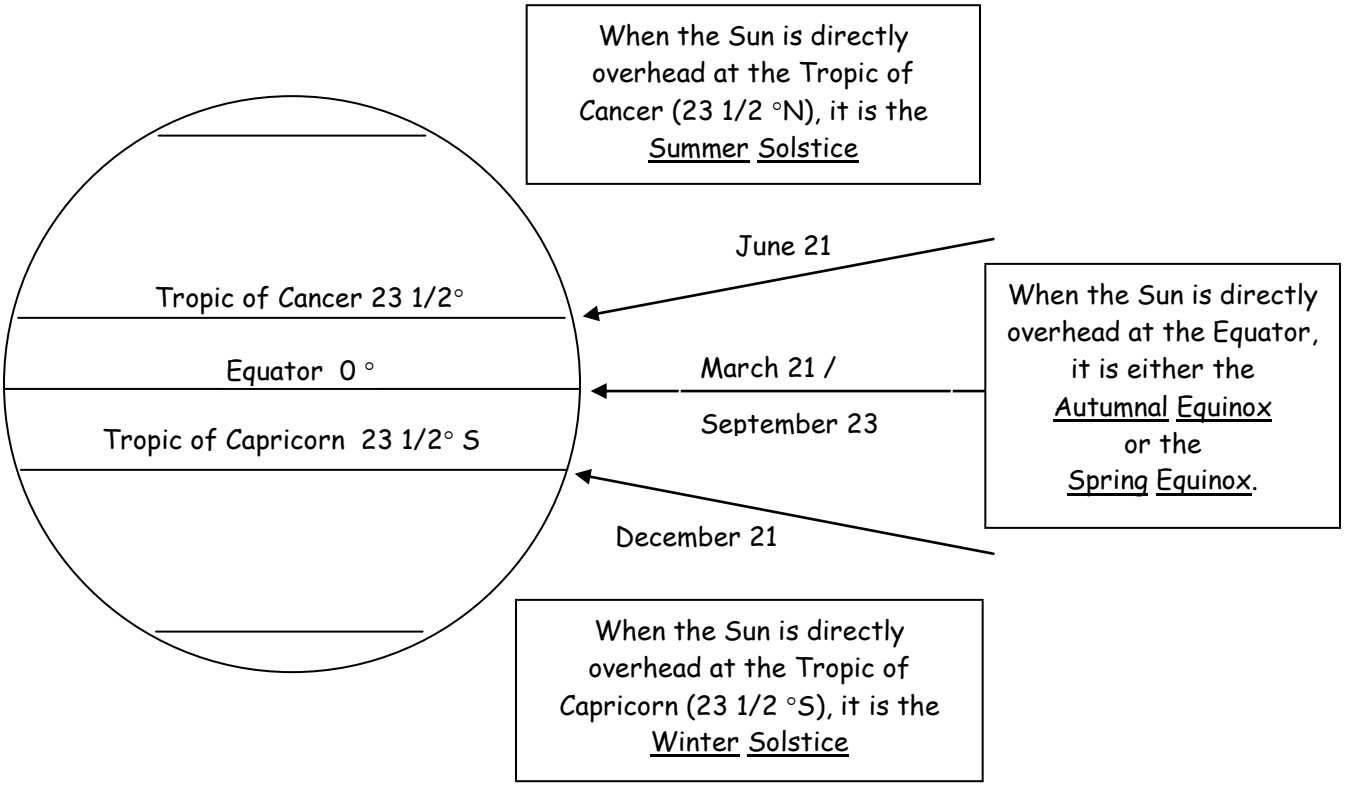

Determining the altitude of the noon sun during the equinoxes and solstices:

1. How many degrees does the Sun move each season? _____
2. The altitude of the noon sun and path of the sun depends on two variables:
   _____ and _____
3. When the direct ray of the sun is striking a location on Earth's surface, the altitude of the noon sun at that location is 90 °. For each of the following locations, name the month or months in which the noon sun is at the zenith for that location.

Location	Month Noon Sun is at Zenith
Tropic of Cancer	_____
Tropic of Capricorn	_____
Equator	_____
New York State	_____

- For each location given determine the altitude of the noon sun at the beginning of each season. The first date given for each location is when the vertical rays are at the Zenith (90°).
- Follow the change in altitude as it moves higher and lower in the sky.
- Draw and label the path of the sun for each season. Remember these lines are parallel to each other.
- For direction of noon sun, choose "overhead", "'north" (northern sky) or "south" (southern sky) - look at the diagram

Location: Tropic of Cancer 23 ½ °N		
Date	Altitude of noon Sun	Direction of Noon Sun
June 21		
Moves lower in the sky	- 23.5°	
September 23		
Moves lower in the sky	- 23.5°	
December 21		
Moves higher in the sky	+ 23.5°	
March 21		

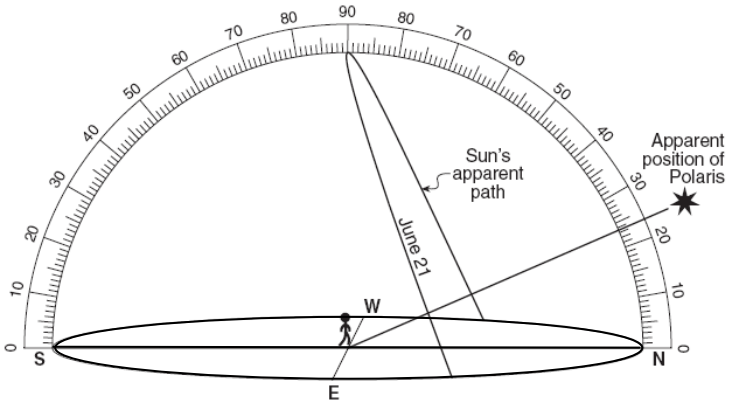

Location: Tropic of Capricorn 23 ½ °S		
Date	Altitude of noon Sun	Direction of Noon Sun
December 21		
Moves lower in the sky	- 23.5°	
March 21		
Moves lower in the sky	- 23.5°	
June 21		
Moves higher in the sky	+ 23.5°	
September 23		

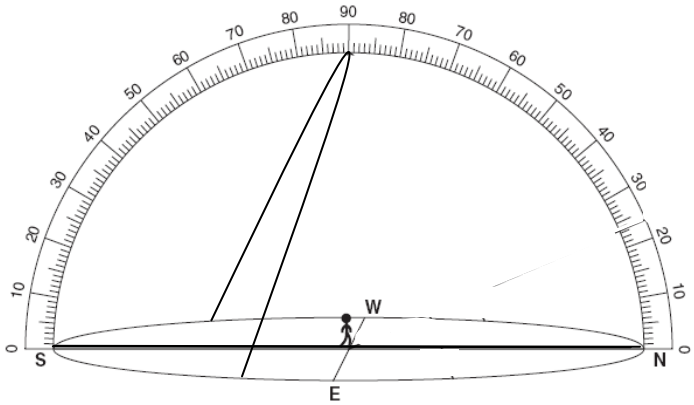

Location: Equator 0 °		
Date	Altitude of noon Sun	Direction of Noon Sun
September 23		
Moves lower in the sky	- 23.5°	
December 21		
Moves higher in the sky	+ 23.5°	
March 21		
Moves lower in the sky	- 23.5°	
June 21		

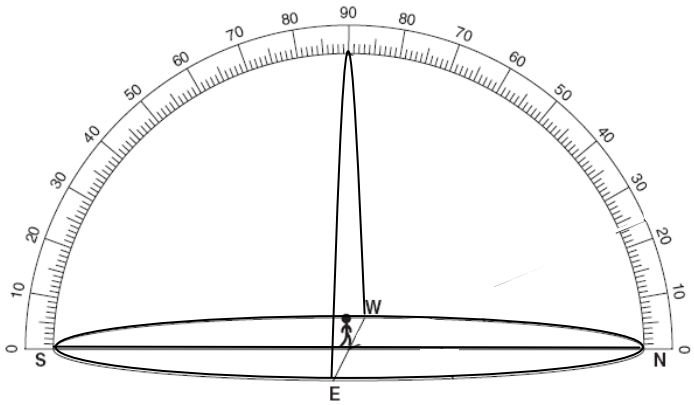

For any other latitudes:
In the northern hemisphere use June as a starting month. Determine if the noon sun is higher or lower in the sky then at the Tropic of Cancer. Follow the procedure below.

Buffalo, NY: 43 °N

1. What is the latitude of Buffalo?	
2. What is the latitude of the Tropic of Cancer?	
3. What is the difference between the two latitudes?	
4. What is the altitude of the noon Sun at the Tropic of Cancer on June 21?	
5. Subtract the difference between latitudes from the altitude of the noon Sun at the Tropic of Cancer. This is the altitude of the noon Sun in New York State on June 21.	

Location: Buffalo, NY - 43 °N

Location: Buffalo 43 °N		
Date	Altitude of noon Sun	Direction of Noon Sun
June 21		
Moves lower in the sky	- 23.5°	
September 23		
Moves lower in the sky	- 23.5°	
December 21		
Moves higher in the sky	+ 23.5°	
March 21		

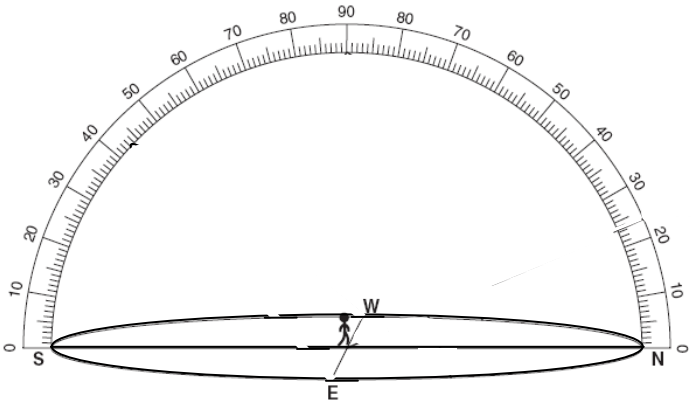

This diagram illustrates the path of the sun and the altitude of the noon sun on the celestial sphere for an observer in New York State (latitude 43°N) at the beginning of each season. Label each star with the <u>month</u> for the path it represents. For each mark between the stars, label the corresponding month of the year. Each mark will have two months of the year. Hint: locate December and move upward labeling the months until June, then go down until you reach December.

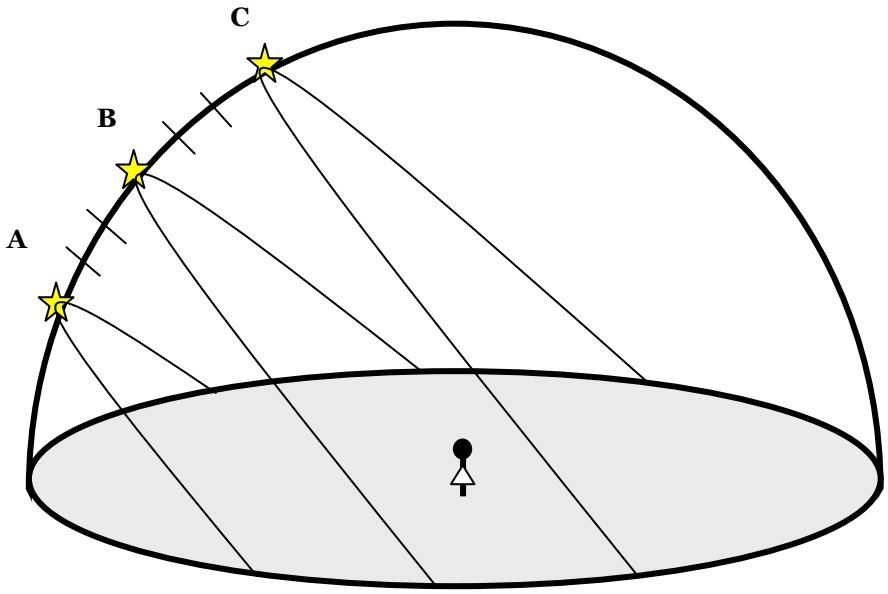

1. Which letter represents the path and altitude of the noon sun on . . .

   December 21? _____ March 21? _____ June 21? _____ September 23? _____

2. In November, the noon sun would most likely be between points _____ and _____
3. In August, the noon sun would most likely be between points _____ and _____
4. In May, the noon sun would most likely be between points _____ and _____
5. In January, the noon sun would most likely be between points _____ and _____
6. In April, the noon sun would most likely be between points _____ and _____
7. In February, the noon sun would most likely be between points _____ and _____
8. In July, the noon sun would most likely be between points _____ and _____
9. In October, the noon sun would most likely be between points _____ and _____

Regents Questions:

Base your answers to questions 1 through 3 on the world map below. The shaded portion of the map indicates areas of night, and the unshaded portion indicates areas of daylight on a certain day of the year. Dashed latitude lines represent the Arctic Circle (66.5° N) and the Antarctic Circle (66.5° S). Point A is a location on Earth's surface.

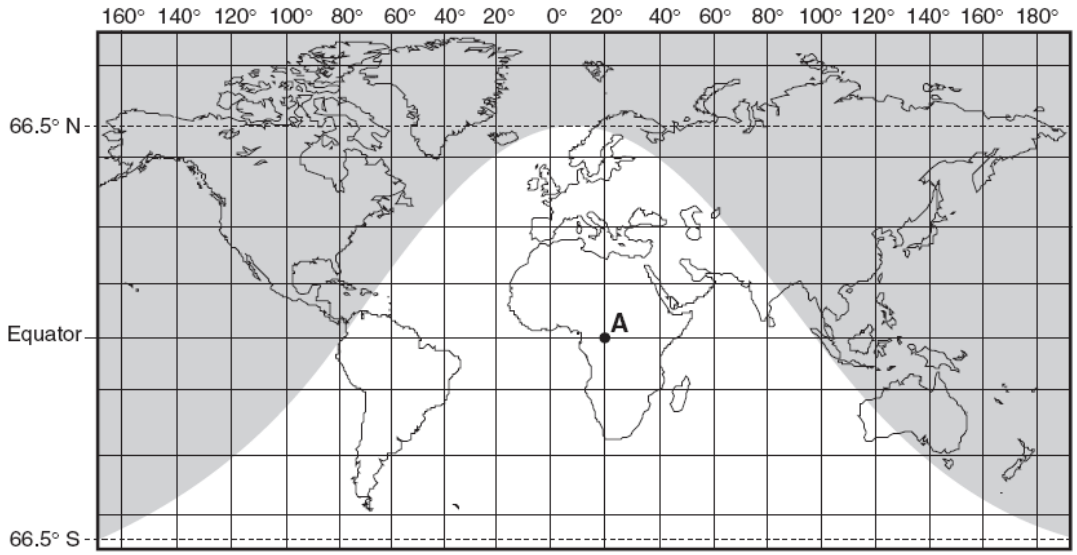

____1. Which diagram shows the position of Earth relative to the Sun's rays on this day?

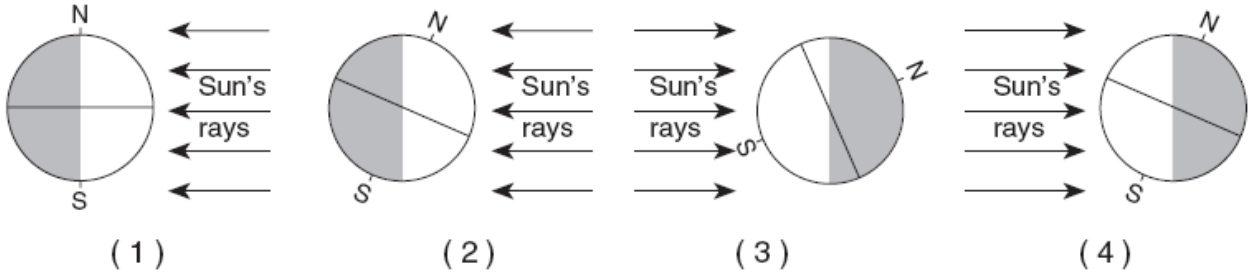

____2. Approximately how many hours of daylight would occur at position A on this day?
(1) 6 (2) 12 (3) 9 (4) 15

____3. On this day, the duration of daylight from the equator to the Arctic Circle
(1) decreases, only
(2) increases, only
(3) decreases, then increases
(4) increases, then decreases

____4. The diagram to the right shows the noontime shadows cast by a student and a tree. If the time is solar noon and the student is located in New York State, in what direction is the student facing?
(1) north (3) south
(2) east (4) west

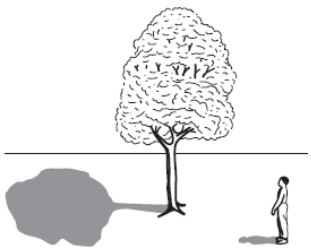

____5. The diagram to the right represents a plastic hemisphere upon which lines have been drawn to show the apparent paths of the Sun at a location in New York State on the first day of each season. Letters A through I represent points on the paths. Which point represents the sunrise location on the first day of winter?

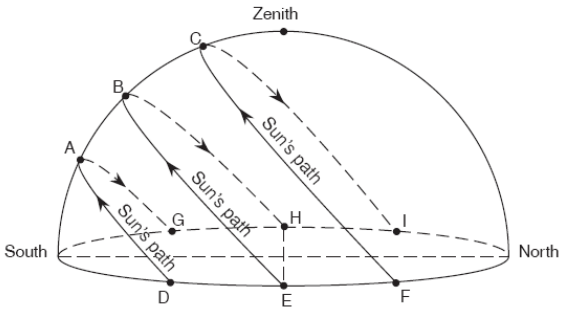

(1) G (2) F (3) E (4) D

____6. A student in New York State looked toward the eastern horizon to observe sunrise at three different times during the year. The student drew the following diagram that shows the positions of sunrise, A, B, and C, during this one-year period.

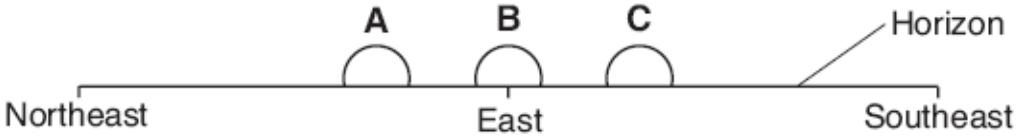

Which list correctly pairs the location of sunrise to the time of the year?

(1) A – June 21
B – March 21
C – December 21

(2) A – December 21
B – March 21
C – June 21

(3) A – March 21
B – June 21
C – December 21

(4) A – June 21
B – December 21
C – March 21

____7. The diagram below shows the apparent daily path of the Sun, as viewed by an observer at a certain latitude on three different days of the year.

At which latitude were these apparent Sun paths most likely observed?

(1) 0°
(2) 43° N
(3) 23.5° N
(4) 66.5° N

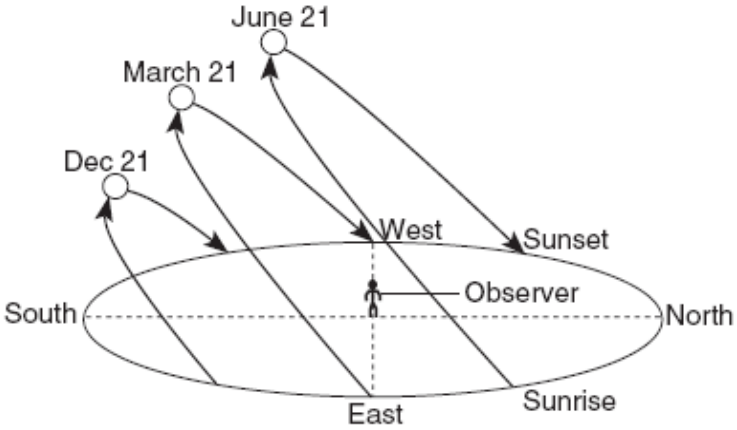

____8. Which diagram to the right correctly shows the apparent motion of Polaris from sunset to midnight for an observer in northern Canada?

(1) 1
(2) 2
(3) 3
(4) 4

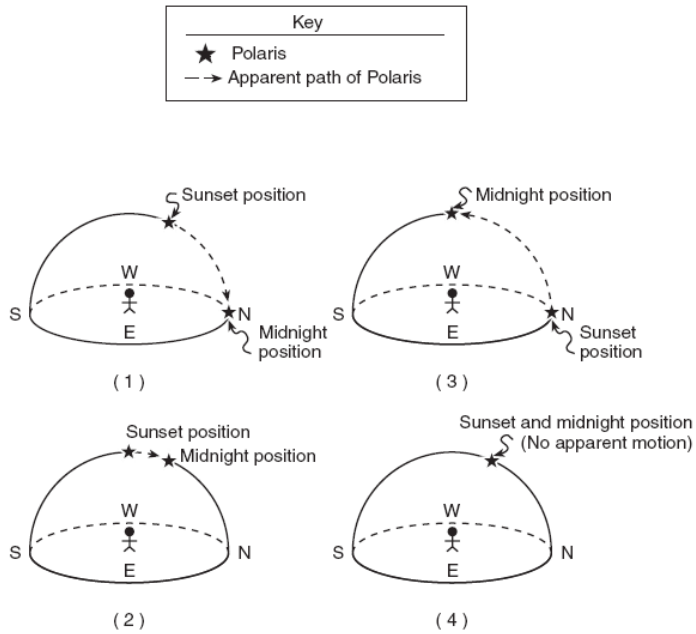

Base your answers to questions 9 through 11 on the diagram below, which shows a model of the apparent path and position of the Sun in relation to an observer at four different locations, A, B, C, and D, on Earth's surface on the dates indicated. The zenith (z) and the actual position of the Sun in the model at the time of the observation are shown. [The zenith is the point directly over the observer.]

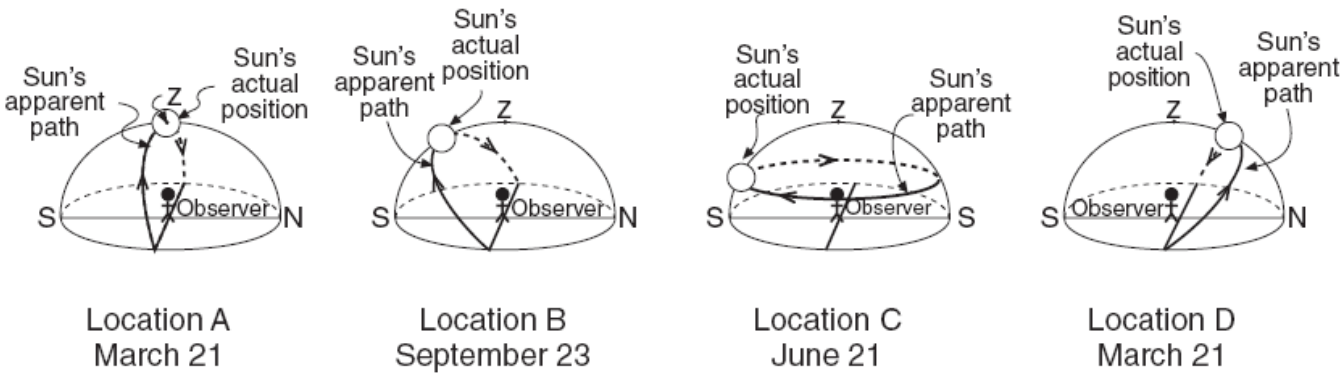

____9. According to the Sun's actual position shown in the diagrams, the most intense insolation is being received by the observer at location
(1) A (2) B (3) C (4) D

____10. Where on Earth's surface is the observer at location C located?
(1) at the Equator
(2) at the South Pole
(3) at the North Pole
(4) in Oswego, New York

____11. From sunrise to sunset at location B, the length of the observer's shadow will
(1) increase, only
(2) decrease, only
(3) increase, then decrease
(4) decrease, then increase

____12. The apparent daily path of the Sun changes with the seasons because
(1) Earth's axis is tilted
(2) Earth's distance from the Sun changes
(3) the Sun revolves
(4) the Sun rotates

Base your answers to questions 13 and 14 on the diagram below, which shows numbered positions of the Sun at four different times along the Sun's apparent daily path, as seen by an observer in New York State. Numbers 1 through 4 represent apparent positions of the Sun.

____13. The observer had the longest shadow when the Sun was at position
(1) 1 (2) 2 (3) 3 (4) 4

____14. During which day of the year is the Sun most likely to follow the apparent path shown?
(1) March 1 (3) October 1
(2) July 1 (4) December 1

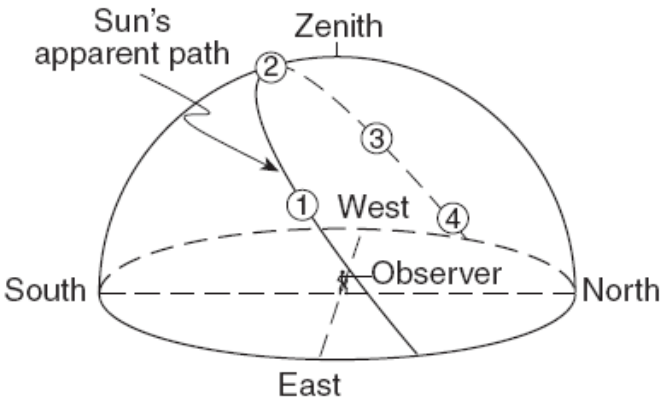

Base your answers to questions 15 and 16 on diagrams I through III below. Diagrams I, II, and III represent the length and direction of the shadow of a vertical stick measured at noon on three different dates at 42° N latitude.

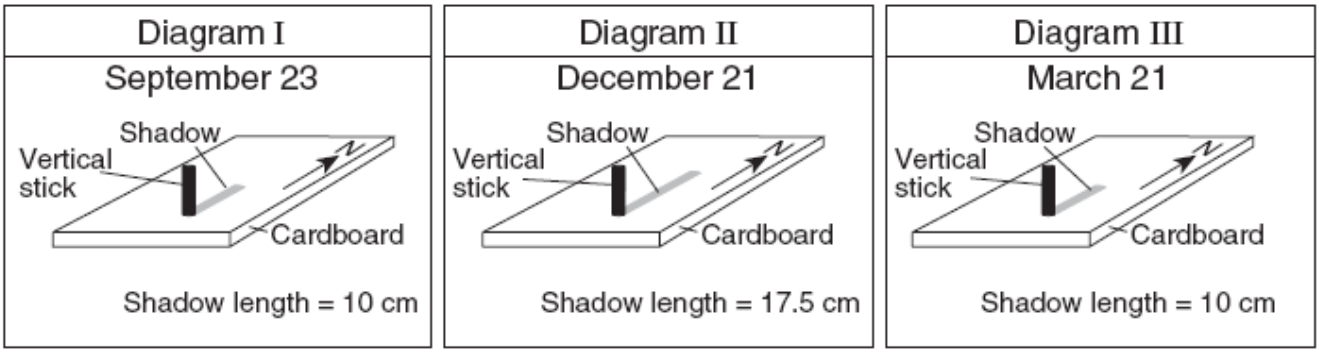

15. Explain how the changing altitude (angle of incidence) of the noon Sun affects the length of the shadows shown in the diagrams. _____

_____

16. Describe the length and direction of the noon time shadow on June 21.

Length: _____

Direction: _____

Base your answers to questions 17 through 21 on the diagram below. The diagram represents the apparent path of the Sun observed at four locations on Earth's surface on March 21. The present positions of the Sun, Polaris, and the zenith (position directly overhead) are shown for an observer at each location.

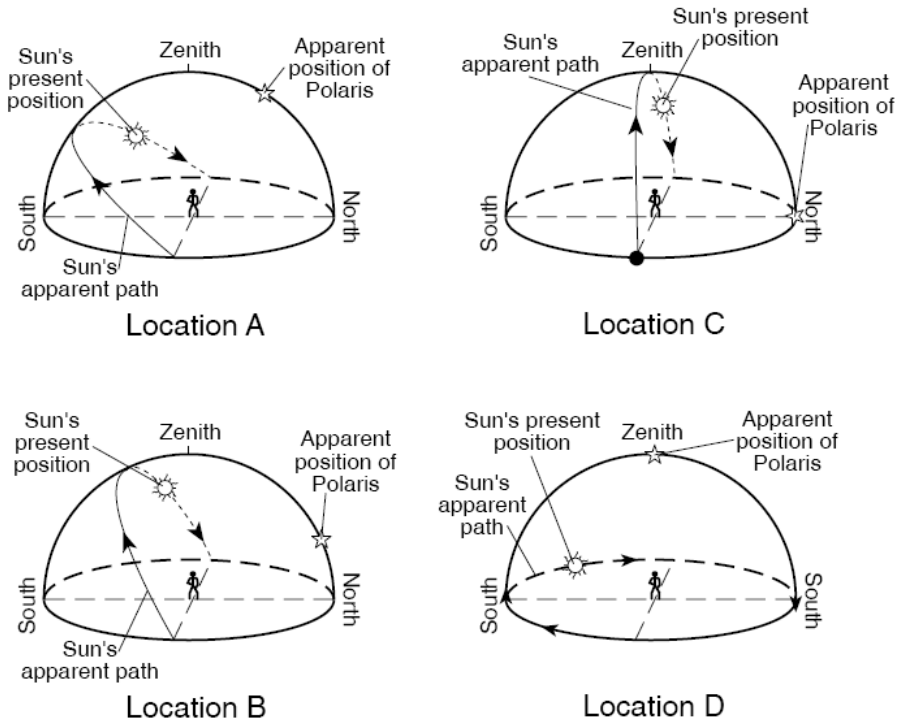

17. The observer at location A casts a shadow at the time represented in the diagram.

    a. State the compass direction in which the observer at location A must look to view her shadow. _____

    b Describe the change in the length of the shadow that will occur between the time shown and sunset. _____

    _____

18. State the approximate time of day for the observer at location B when the Sun is at the position shown in the diagram. _____

19. Explain why the intensity of sunlight at noon on March 21 is greater at location C than at the other locations. _____

    _____

20. The observer at location D is located at a higher latitude than the other three observers. State one way that this conclusion can be determined from the diagram.

    _____

21. State the other day of the year when the Sun's apparent path is exactly the same as that shown for these four locations on March 21. _____